Microelectronics Journal 158 (2025) 106599

Contents lists available at ScienceDirect

Microelectronics Journal

journal homepage: www.elsevier.com/locate/mejo

Power-efficient SAR ADC with noise-reduction scheme based on kT/C noise cancellation and adaptive tracking averaging

Anji Huang [a,b,c], Gefeng Zeng [a,b,c], Yi Shen [a,b,c,*], Angyang Li [a,b,c], Libo Qian [a,b,c], Qing Zou [d], Zheng Qiu [b,d], Min Wang [b,d], Shubin Liu [a,b,c], Ruixue Ding [a,b,c], Yinshui Xia [e], Zhangming Zhu [a,b,c]

[a] Hangzhou Institute of Technology, Xidian University, Hangzhou 311200, China
[b] School of Integrated Circuits, Xidian University, Xi'an 710071, China
[c] Zhejiang Key Laboratory of Analog Integrated Circuits, Hangzhou 311200, China
[d] Zhejiang Geoforcechip Technology Co., Ltd., Hangzhou 311200, China
[e] Faculty of Electrical Engineering and Computer Science, Ningbo University, Ningbo 315211, China

ARTICLE INFO

Keywords:
Successive approximation (SAR) ADC
KT/C noise cancellation
Adaptive tracking averaging

ABSTRACT

Conventional successive approximation register (SAR) ADCs encounter a compromise between accuracy and power consumption. This work presents an efficient noise-reduction scheme to mitigate sampling noise and comparator noise. The kT/C noise cancellation technique reduces the kT/C noise and facilitates the reduction of the sampling capacitance to one-sixth of its typical value in conventional architectures. LSB repeating and adaptive tracking averaging(ATA) technique are also employed to decouple the correlation between the energy and the noise in the comparator. Post-simulation results indicate that the signal-to-noise distortion ratio (SNDR) and spurious-free dynamic range (SFDR) of the proposed 14-bit prototype SAR ADC attain values of 84.5 dB and 95.5 dB respectively at a Nyquist input rate and a sampling rate of 1 MS/s. The power consumption is 431.6 μW with a 1.8 V power supply, resulting in a "Walden" figure of merit (FoMw) of 35.7 fJ/conv-step and a "Schreier" figure of merit (FoMs) of 173.3 dB in a 0.18-μm CMOS process.

1. Introduction

SAR ADCs have distinct advantages in low-power applications owing to their superior energy efficiency and reliable digital compatibility. Nevertheless, conventional SAR ADCs encounter several constraints. The substantial sampling capacitors necessary for low kT/C sampling noise impose tremendous demands on the ADC input driver, resulting in significant additional power consumption beyond the ADC core. Conversely, the comparator in the ADC core, which influences noise performance, exhibits a linear increase in power consumption with increased precision demands, revealing a trend where every fourfold rise in power yields a 6 dB enhancement in SNR, resulting in considerable energy dissipation.

The kT/C noise cancellation is a trendy solution to mitigate the input driver overhead resulting from large sampling capacitors. In [1], by introducing The kT/C noise cancellation technique, it markedly decreases the size of the ADC input capacitor while minimizing sampling noise, thus substantially eases the demand for the ADC input driver. Nonetheless, this method mitigates the effects of sampling noise, it does not optimize comparator noise. In [2], a noise-shaping SAR ADC that utilizes the kT/C noise cancellation to mitigate sampling noise and incorporates a low-power floating inverter dynamic comparator is presented. however, this methodology leads to a compromise in linearity and precision.

In research aimed at minimizing comparator power consumption [3], the paper introduced a dynamic comparator utilizing a floating inverter amplifier configuration, integrated with body-driven or biasing methods, resulting in an ultra-low-power 10-bit SAR ADC, but with constrained speed. A high-gain, low-power two-stage comparator by integrating duty-cycle modulation operational amplifiers with floating inverter amplifier is developed in [4]. Nevertheless, this study did not address the optimization of sampling noise.

This work introduces a low-power, high-precision SAR ADC and suggests a comprehensive scheme for noise-reduction and energy-saving. The scheme implements the kT/C noise cancellation to mitigate sampling noise and minimize the sampling capacitor size to merely 670 fF, thus alleviating the burden on the ADC input driver. The Least Significant Bit (LSB) repeating approach with an adaptive tracking averaging (ATA) algorithm is utilized to diminish the correlation between comparator noise and power consumption, thereby reducing both comparator noise and power consumption.

* Corresponding author at: Hangzhou Institute of Technology, Xidian University, Hangzhou 311200, China.
E-mail address: shenyisz@126.com (Y. Shen).

https://doi.org/10.1016/j.mejo.2025.106599
Received 28 December 2024; Received in revised form 1 February 2025; Accepted 11 February 2025
Available online 21 February 2025
1879-2391/© 2025 Elsevier Ltd. All rights are reserved, including those for text and data mining, AI training, and similar technologies.

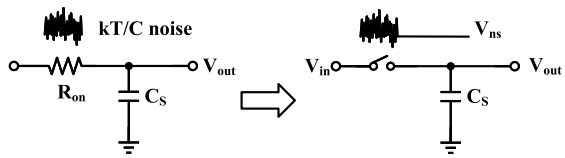

Fig. 1. Simplified sampling circuit with kT/C noise.

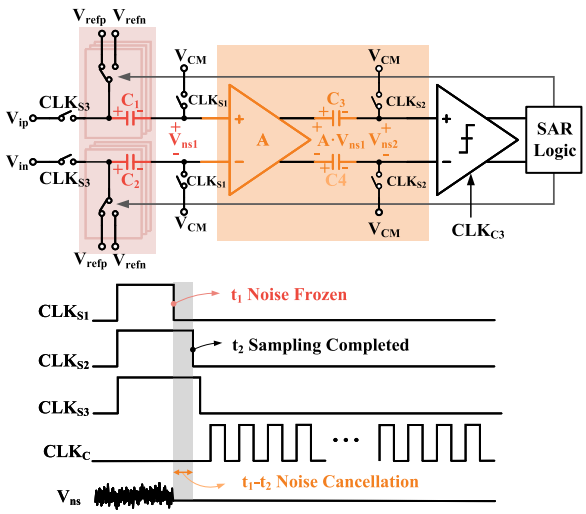

Fig. 2. Comparator with kT/C noise cancellation.

Section 2 discusses the principles of the kT/C noise cancellation method and the LSB repetition technique. Section 3 indicates the comprehensive execution of the proposed noise reduction and energy conservation scheme for the ADC. Section 4 presents the post-simulation outcomes and offers a discussion. Section 5 summarizes this manuscript.

2. Analysis of proposed scheme

2.1. kT/C noise cancellation

Fig. 1 illustrates a simplified representation of a sampling circuit with kT/C noise. During the sampling of the input signal V_{in}, the thermal noise generated by the on-resistance R_{on} of the sampling switch is overlaid onto V_{in}. Upon completion of the sampling procedure, the noise voltage V_{ns} is "frozen" on the sampling capacitor C_S. In the process of converting the sampled voltage, the kT/C noise functions as an extraneous offset voltage, which can be regarded as a component of the offset voltage and subsequently removed. This design employs an offset storage technique, wherein the kT/C noise is transformed into charge and retained on the capacitor.

Fig. 2 illustrates the kT/C noise cancellation architecture implemented in this design. The comparator comprises a pre-amplification stage and a latch stage, incorporating noise storage capacitors C_3 and C_4 positioned between the pre-amplifier and the latch. These capacitors retain the sampling noise and the offset prior to the pre-amplifier.

When the clock CLK_{S1} triggers high, the sampling capacitors C_1 and C_2 sample the input signal without taking into account the offset voltage of the operational amplifier. The switch disconnects when the clock CLK_{S1} is low, preventing C_1 and C_2 from further charging or discharging. The bottom-plate sampling is completed by storing the input signal as charge on the sampling capacitors. The only problem left is the sampling noise from the switch when the clock CLK_{S1} falls low because the input signal is completely reset. The noise voltages V_{ns1+} and V_{ns2-} indicate the kT/C noise, which is "frozen" on the sampling capacitors. The differential input voltage of pre-amplifier is therefore set to the differential noise voltage V_{ns1} between V_{ns1+} and V_{ns1-}, which can be thought as a processing "offset" value.

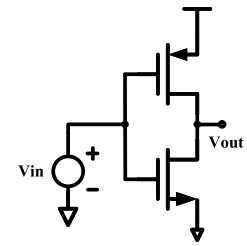

Fig. 3. Complementary common-source amplifier.

The clock CLK_{S2} falls later than the clock CLK_{S1}, and the interval between these two edges defines the phase of sampling noise storage. The pre-amplifier amplifies the "offset" voltage V_{ns1}, which the noise storage capacitors C_3 and C_4 retain during the noise cancellation phase. C_3 and C_4 establish a configuration similar to an output offset storage, canceling the "offset" voltage V_{ns1} afterward.

As the clock CLK_{S2} falls, it generates kT/C_3 and kT/C_4 noise. However, this occurs after the pre-amplifier, where the pre-amplifier gain A reduces the kT/C_3 and kT/C_4 noise when calculating the input-referred noise of the comparator. Ideally, the kT/C_1 and kT/C_2 noise voltages are completely eliminated. The total sampling noise V_{ns} is equal to the attenuated differential noise voltage V_{ns2} between kT/C_3 and kT/C_4, as seen in

$$\overline{v_{ns}^2} = \frac{\overline{v_{ns2}^2}}{A^2}. \tag{1}$$

In an N-bit SAR ADC, assuming that the amount of the kT/C noise is equivalent to that of the quantization noise, the result is presented in

$$\frac{kT}{C_s} = \frac{\Delta^2}{12}. \tag{2}$$

By substituting into (2), the sampling capacitor C_s must fulfill the criteria specified in

$$C_s = 12kT \times \left(\frac{2^N}{V_{FS}}\right)^2. \tag{3}$$

For a standard 14-bit SAR ADC with V_{FS}=1.8 V, the required sampling capacitor size is determined to satisfy the specifications, as indicated in

$$C_s \approx 4.1\,pF. \tag{4}$$

In this design, the capacitance of the unit capacitor C_1 is 5fF, and the total sampling capacitance C_s is presented in

$$C_{s_actual} = 670\,fF. \tag{5}$$

2.2. Adaptive tracking averaging

Upon the analysis of the optimization scheme for sampling noise, it is observed that the kT/C noise reduction is ineffective in alleviating the thermal noise of the comparator. The noise performance of the comparator is essential for the high-precision SAR ADC. Typically, increased power consumption is traded to lessen the effect of comparator noise.

Fig. 3 illustrates the circuit of a complementary common-source amplifier. The equivalent input noise power is represented by

$$\overline{V_{n,in}^2} = \frac{4kT\gamma}{g_{m1} + g_{m2}}. \tag{6}$$

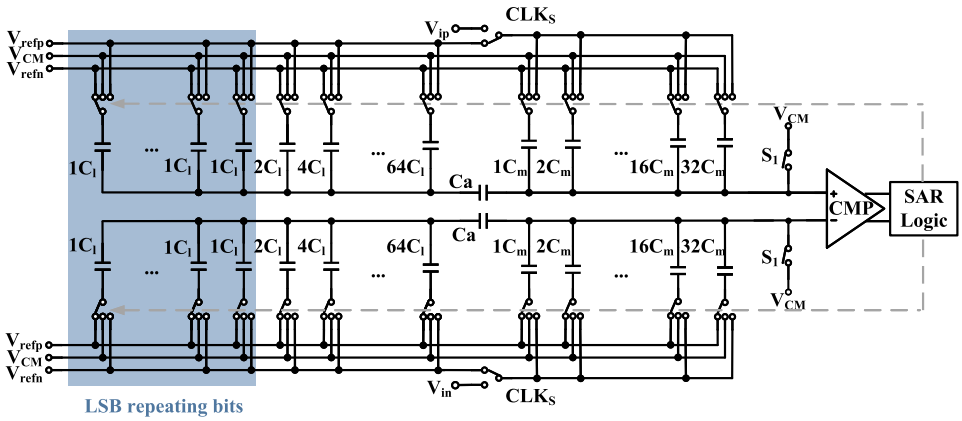

Fig. 4. SAR ADC with LSB repeating bits.

The input noise power is inversely proportional to $g_{m1} + g_{m2}$. Under the condition of equal overdrive voltage, the relationship between the input noise voltage and current is given in

$$\overline{V_{n,in}^2} = \frac{2kT\gamma(v_{ov,m1} + v_{ov,m2})}{I}. \tag{7}$$

The relationship between the SNR and the power of the noise is presented in (8), taking into account the thermal noise of the comparator

$$SNR = 10\log\left(\frac{P_s}{P_{n,q} + P_{n,comp}}\right) \tag{8}$$

where P_s represents the signal power, $P_{n,q}$ is the quantization noise power, and $P_{n,comp}$ is the thermal noise power of the comparator.

When $P_{n,comp}$ is much greater than $P_{n,q}$, $P_{n,comp}$ becomes the main noise factor in the equation. The above equations demonstrate that doubling the comparator current increases the SNR by approximately 6 dB. Therefore, considering only the power consumption of the comparator, the ADC power can be expressed by

$$P = P_0 \cdot 4^{\frac{\Delta SNR}{6}} \tag{9}$$

where P_0 denotes the comparator power consumption at an N-bit resolution, ΔSNR signifies the enhancement in the SNR resulting from the increased bits to the resolution, and P represents the comparator power consumption subsequent to the resolution increase by ΔSNR from P_0.

To reduce the impact of comparator noise, the proposed SAR ADC uses ATA along with LSB repeating. M-bit $1C$-unit capacitors and logic switches are introduced, which facilitate repeating of LSB quantization to reduce comparator noise. The scheme adaptively selects an appropriate number of $1C$-unit capacitors as redundant bits based on the amount of settling error when entering the LSB quantization phase. Then the ATA algorithm handle all LSB output codes. Fig. 4 illustrates the specific circuit implementation.

This part explicates the mechanisms of adaptive tracking and averaging. The SAR ADC quantization starts with the regular binary quantization. If V_{DAC} does not enter the noise threshold range of the comparator during the LSB repeating phase, the ADC will transition to the adaptive tracking phase. Once V_{DAC} entered the threshold noise range of the comparator, the LSB averaging phase takes place.

After the typical successive approximation quantization phase, the output codes of the comparator tell the SAR ADC whether to change to the adaptive tracking phase or the LSB averaging phase. When the comparator consistently provides "1-1" or "0-0", it signifies that V_{DAC} has not yet reached the threshold noise range of the comparator. When the comparator provides "1-0" or "0-1", it indicates that V_{DAC} has entered the threshold noise range of the comparator. Upon detection, the ADC immediately transitions from the adaptive tracking phase to the LSB averaging phase.

SAR state	Normal Conversion			Adaptive tracking				LSB average			
Weight	8	4	2	1	1	1	1	1/4	1/4	1/4	1/4
D_{ATA}	0	0	1	1	1	1	1	0	1	1	0
CMP threshold	Settling error						Toggle pattern				
D_{NOR}	0	0	2	/	/	/	/	/	/	/	/
D_{SET}	/	/	/	1	1	1	1	/	/	/	/
D_{LSB}	/	/	/	/	/	/	/	0	0	1	1
Decoded value	0	0	2	4				0.5			

Fig. 5. Time diagram of ATA algorithm conversion.

Fig. 5 shows the temporal sequence of the adaptive tracking and averaging technique. V_{DAC} indicates the single-ended input voltage to the comparator and D_{ATA} denotes the output code of the comparator. In the standard successive approximation quantization phase, D_{NOR} presents the encoded output value. In the adaptive tracking phase, D_{SET} indicates the encoded value. During the LSB averaging phase, D_{LSB} indicates the encoded output. The shaded rectangular region in the illustration denotes the noise threshold range of the comparator. The existence of comparator noise influences the output code of the comparator.

For example, in the setting of a N-bit SAR ADC, with M additional 1C-unit capacitors for LSB repeating quantization facilitates the encoding of all codes found during the conversion phase. The standard successive approximation quantization process multiplies the digital code $D_{ATA}(n)$ by its associated $Weight(n)$ to generate the digital code value $D_{NOR}(n)$.

If the current code $D_{ATA}(n)$ is equal to the previous code $D_{ATA}(n-1)$, it indicates that the code value is still in adaptive tracking encoding mode. If not, the adaptive tracking encoding mode gets terminated, simultaneously the LSB averaging encoding mode gets applied. (10) indicates the above encoding procedure:

$$\begin{cases} D_{NOR}(n) = D_{ATA}(n) \times Weight(k) & , n < N \\ D_{SET}(n) = 2 \times D_{ATA}(n) - 1 & , n > N - 1. \end{cases} \tag{10}$$

The encoding process in the adaptive tracking mode involves not only multiplying the digital code values by a weight of "1", but also making adjustments based on the values of $D_{ATA}(n-1)$ and $D_{ATA}(n)$.

Specifically, the coefficients "-1" or "+1" multiply the corresponding values if the codes are "0-0" or "1-1", respectively.

Additionally, the remained number of code values to process in the LSB averaging mode is denoted as

$$NUM = M + N - n + 1, D_{ATA}(n) \neq D_{ATA}(n-1). \tag{11}$$

Upon completing the adaptive tracking encoding mode, the ADC immediately transitions to the LSB averaging encoding mode. The encoding procedure for the digital code output during the LSB averaging phase is depicted in

$$D_{LSB}(m) = \begin{cases} D_{ATA}(m) & , m = N + M - NUM + 1 \\ D_{LSB}(m-1) + D_{ATA}(m-1) + D_{ATA}(m) - 1 & \\ & , m > N + M - NUM + 1. \end{cases} \tag{12}$$

The analysis indicates that the encoding process of the ATA algorithm in the SAR ADC contains three possible cases:

Firstly, consider the case in which NUM, the residual count of least significant bit averaged bits, equals 0. Throughout this specific case, all LSB repeated bits get used as redundant bits, with only the standard quantization and adaptive tracking modes engaged during the entire encoding process.

Secondly, consider the case in which NUM is equivalent to M+1. In this case, the comparator skips the adaptive tracking encoding mode from the first LSB capacitor. All of the LSB capacitors are linked to the digital output codes that are used for LSB averaging.

Finally, when NUM ranges from 1 to M, some of LSB capacitors work as redundant bits, while the others are used for LSB averaging.

In summary, to obtain the final quantization result D_{OUT}, all code values D_{ATA} are encoded as follows:

$$D_{OUT}(n) = \begin{cases} \sum_{k=1}^{N-1} D_{NOR}(k) + \sum_{n=N}^{N+M} D_{SET}(n) & , NUM = 0 \\ \sum_{k=1}^{N-1} D_{NOR}(k) + \frac{\sum_{m=N}^{N+M} D_{LSB}(m)}{NUM} & , NUM = M + 1 \\ \sum_{k=1}^{N-1} D_{NOR}(k) + \sum_{n=N}^{N+M-NUM} D_{SET}(n) + \frac{\sum_{m=N+M-NUM+1}^{N+M} D_{LSB}(m)}{NUM} & \\ & , 1 \leq NUM \leq M. \end{cases} \tag{13}$$

Following the introduction of ATA, the correlation for the power consumption of the comparator is depicted as follows:

$$P = P_0 \cdot \frac{N+M}{N}. \tag{14}$$

P_0 represents the power consumption of the pre-amplifier when neither LSB repeating nor the ATA algorithm is employed, and only the pre-amplifier noise is considered. In the actual simulation, P_0 is 202 μW at an SNR of 82.6 dB. When the input-referred noise of the pre-amplifier is decreased or the number of LSB repeating bits is increased, the improvement in SNR performance also introduces varying levels of pre-amplifier power consumption.

The implementation of LSB repeating with M-bit demands increased processing time for the comparator, hence augmenting its power consumption. A comparator employing N-bit conventional bits and M-bit LSB repeating bits consumes more power than a comparator utilizing a N-bit setup.

Fig. 6(a) shows the variation of the SNR with increasing M under simulation. When M is less than 8, the relationship between SNR and M exhibits a linear increase. Consequently, the power consumption of the comparator can be expressed as

$$P = P_0 \cdot (1 + \beta \cdot \Delta SNR). \tag{15}$$

The implementation of ATA decouples the relationship between SNR and comparator power, facilitating substantial power savings while achieving low noise performance for the ADC.

Fig. 6(a) illustrates the relationship between SNR and power consumption when N is set to 16, incorporating 2 redundant bits to alleviate DAC settling error. The absence of ATA demands a doubling of power consumption to achieve 3 dB enhancement in SNR, with power consumption growing exponentially in relation to SNR, consistent with the conclusion from (9). With the implementation of ATA, the power consumption increases linearly with SNR, in accordance with the result from (15).

As shown in Fig. 6(a) and Fig. 6(b), when M exceeds 8, the noise reduction effect of the comparator is alleviated, as quantization noise begins to play a dominant role. When the SNR reaches its limit, the power consumption P exhibits an exponential increase with higher SNR levels. The simulation results indicated that the fitting parameters were around $\alpha = 1.26$ and $\beta = 0.0267$. To achieve minimal noise while optimizing power consumption, the design selects M=7.

3. The architecture of proposed SAR ADC

3.1. Overall circuit

The architecture of the proposed SAR ADC is shown in Fig. 7. It employs bottom-plate sampling and utilizes synchronous timing. A clock module generates internal sampling and comparator clocks by transforming an external sinusoidal signal into a square wave within the SAR ADC. A VCM-based switching scheme is employed to minimize power consumption.

This design utilizes a segmented charge redistribution DAC (CDAC) to minimize capacitor area and power consumption. As illustrated in Fig. 7, the CDAC array employs 7 LSB repeating capacitors in the second segment. Furthermore, both the first and second segments suitably comprise redundancy bits. The segmented capacitor construction employs a "7 + (8 + 7)" configuration in the capacitor array.

3.2. Pre-amplifier

In this work, the pre-amplifier uses complementary NMOS and PMOS transistors as input devices. A resistor is utilized to bias the tail NMOS transistor, enabling the sensing of the output common-mode voltage and the establishment of common-mode negative feedback. Fig. 8 illustrates the main structure of the pre-amplifier.

3.3. Timing diagram

The proposed SAR ADC is based on a synchronous clocking scheme. After clock division, the system generates all operational clocks for the ADC. The ADC utilizes the SET signal to initialize the state at the beginning of each conversion cycle. After that, the CLK_{S1}, CLK_{S2}, and CLK_{S3} signals work together to control the sampling network. This network samples cancels the kT/C noise and the offset. Upon completion of sampling, the CLK_C, $Valid$, and CLK_{AMP} signals activate the comparator and pre-amplifier. Following the 16th comparison, the circuit executes the 7 iterations of LSB quantization. The ADC ultimately generates 23-bit digital code. Fig. 9 depicts the comprehensive timing diagram.

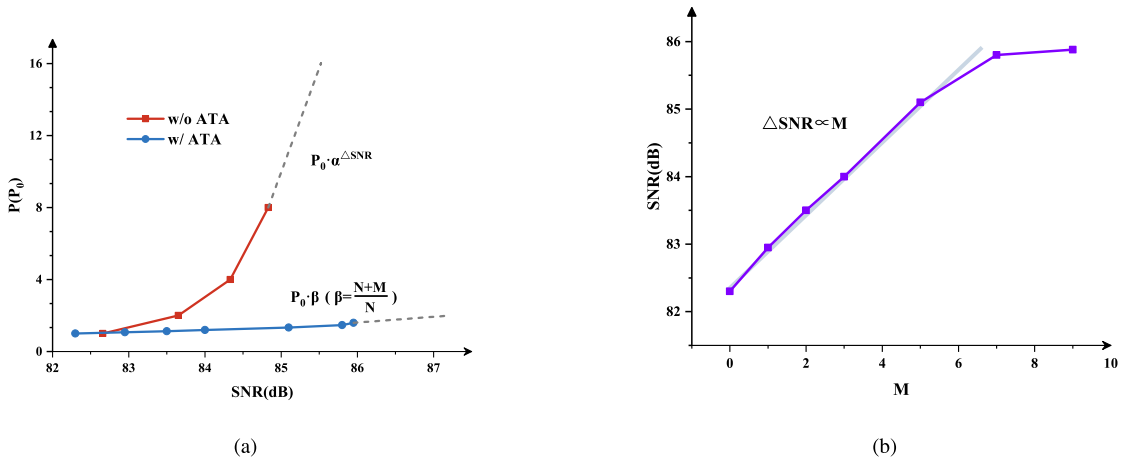

Fig. 6. Averaging effect:(a)Power efficiency w/ and w/o ATA,(b)SNR enhancement with LSB repeating bits M.

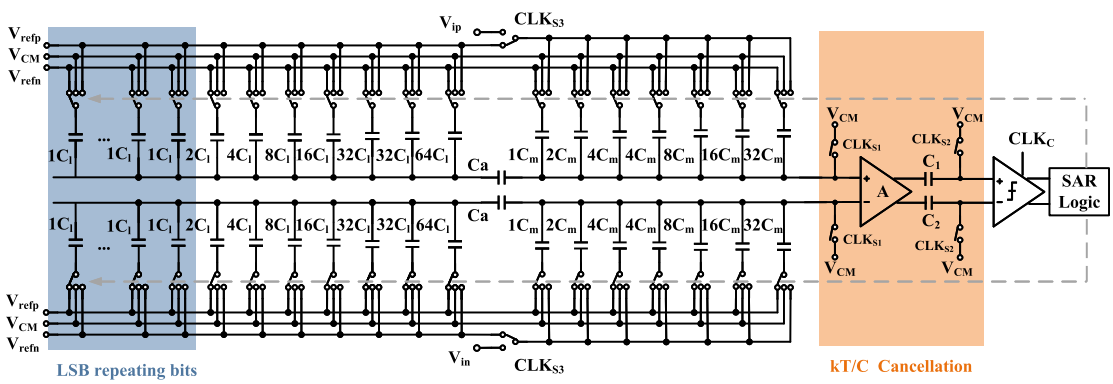

Fig. 7. The architecture of 14-bit 1M/s SAR ADC.

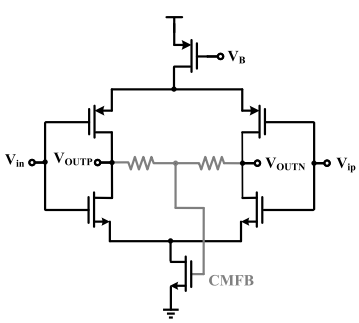

Fig. 8. Pre-amplifier.

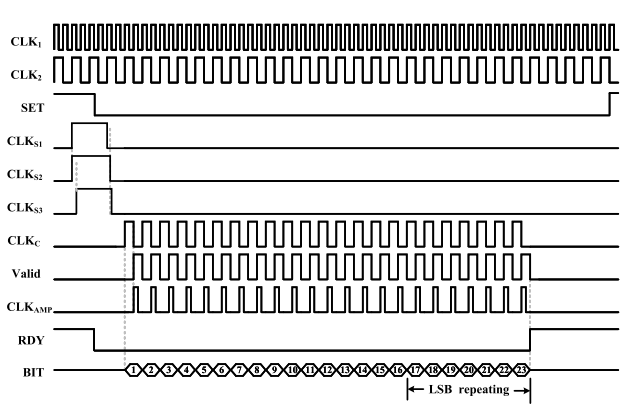

Fig. 9. Timing diagram.

4. Simulation results and discussion

The proposed 14-bit SAR ADC is designed and post-simulated in a 180-nm CMOS process, with the 1-MS/s sampling rate, 1.8-V supply. By implementing the kT/C noise reduction technique, the amount of sampling noise is minimized, allowing for a reduction in the size of the sampling capacitor to one-sixth of its original size while maintaining equivalent noise. This, furthermore, reduces the requirements placed on the ADC input driver. In addition, the incorporation of auto-zeroing efficiently eliminates offset. The proposed ADC noise reduction mechanism incorporates ATA. This technique minimizes the power consumption of the comparator when faced with equivalent comparator thermal noise conditions.

To show the noise reduction impacts of the kT/C noise cancellation and ATA algorithm, simulations were run to evaluate the ADC performance w/ and w/o kT/C noise cancellation, as well as w/ and w/o ATA.

Fig. 10(a) shows that the SAR ADC using kT/C noise cancellation technique has enhanced SNR, SNDR, and ENOB compared to a conventional SAR ADC with the same sampling capacitor size. More precisely, when considering the TT, SS and FF process corners, the SNR is improved by 4.8 dB, 3.7 dB, and 4.2 dB respectively. The results confirm the effectiveness of the kT/C noise cancellation technique in reducing noise when the size of the sampling capacitor is approximately one-sixth of a typical SAR ADC.

Fig. 10(b) demonstrates that the SAR ADC utilizing ATA has improved SNR SNDR, and ENOB compared to the SAR ADC without implementing the algorithm. More precisely, it enhances the SNR by 3.5 dB, 2.9 dB, and 2.8 dB and the SNDR by 3.5 dB, 2.9 dB, and 2.7 dB

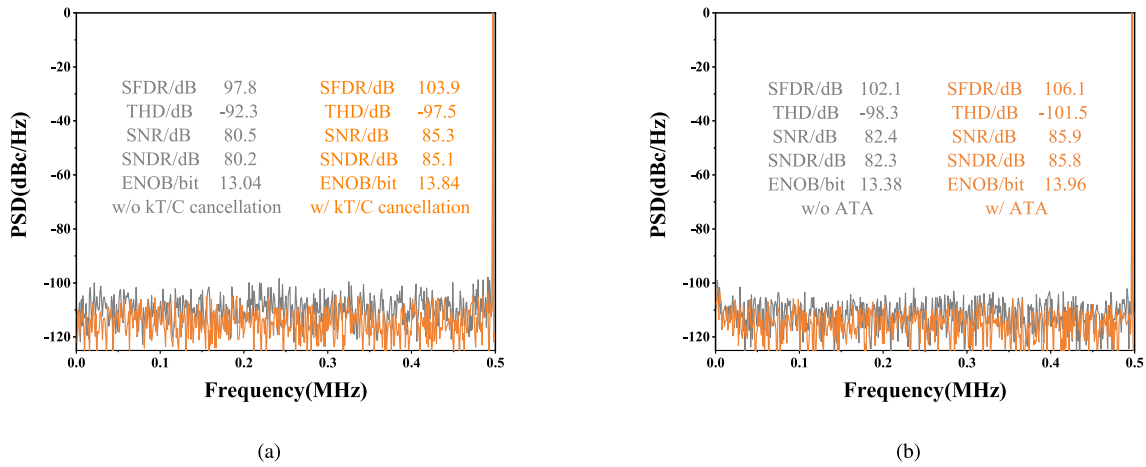

(a) (b)

Fig. 10. Averaging effect:(a)Power spectrum before (gray) and after (orange) kT/C cancellation,(b)Power spectrum before (gray) and after (orange) ATA.

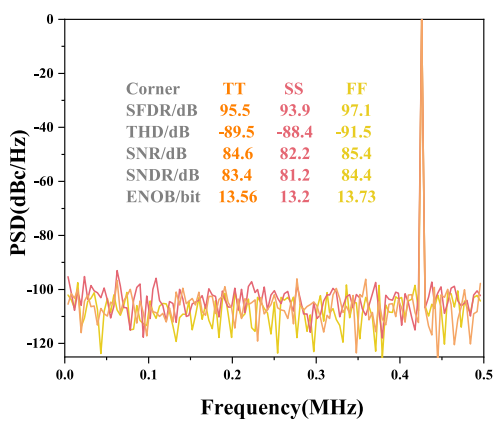

Fig. 11. Power spectrum in post-simulation.

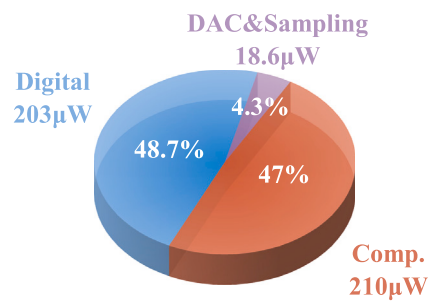

Fig. 12. Power breakdown diagram.

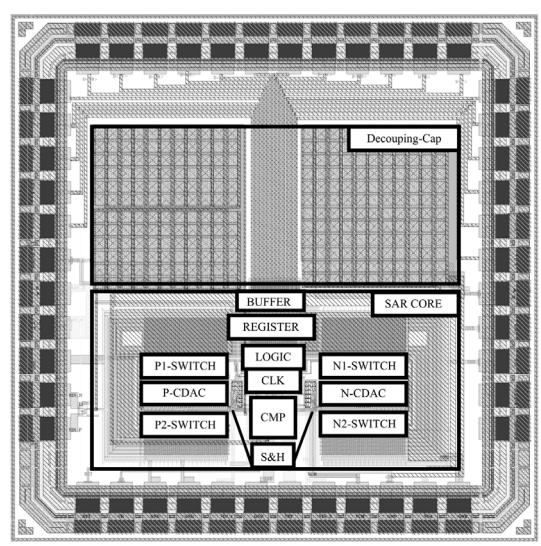

Fig. 13. The layout of proposed SAR ADC.

under the TT, SS and FF process corners, respectively. These results confirm the effectiveness of the ATA algorithm in reducing the of noise.

The power consumption demands for the comparator can be lessened by reducing the effect of comparator noise. The simulation findings show that the overall signal-to-noise ratio (SNR) is enhanced by roughly 3 dB only when the comparator noise is taken into account. This improvement occurs at normal process corners with ATA.

Fig. 11 shows the post-simulation spectrum of the proposed SAR ADC at the TT, SS and FF process corners with an input frequency of 0.497 MHz. The SNR, SNDR, SFDR and ENOB are 84.6 dB, 84.5 dB, 95.5 dB, −89.5 dB and 13.56 bits at TT corner, 84.6 dB, 83.4 dB, 81.2 dB, −88.4 dB and 13.2 bits at SS corner, 85.4 dB, 84.4 dB, 97.1 dB, −91.5 dB and 13.73 bits at FF corner, respectively.

Fig. 12 depicts the power breakdown of the proposed ADC. The power consumption from sampling and capacitor switching constitutes 4.32% of the total power. The comparator accounts for 47.03% of the total chip power consumption, whereas the digital logic consumes 48.65%. The overall power consumption is 431.626 μW.

Fig. 13 shows the layout of the proposed SAR ADC. The active area is 0.15 mm^2, including one side CDAC array of 0.015 mm^2(10%) which the capacitance is 670 fF.

In the post-simulation, the FoMw of the ADC is 173.3 dB at the TT process corner, 172.0 dB at the SS process corner, and 172.8 dB at the

Table 1
Comparison of different works.

	This Work[a]	[5][a] MEJ 2023	[8][b] MEJ 2024	[9][b] TCAS-II 2023	[6][b] JSSC 2018	[10][b] ISSCC 2018	[7][b] JSSC 2019
Architecture	SAR	SAR	SAR	SAR	SAR	Pipe-SAR	CT-SAR
Technology (nm)	180	180	180	180	55	180/500	40
Supply (V)	1.8	1.8	1.8	5	3.3/1.2	1.8	1.1/0.7
Resolution (bit)	14	14	18	16	16	20	13
Sampling rate (MS/s)	1	1	1.2	1	16	1	2
SFDR (dB)	95.5	93.43	102	103	98	132	79.4
SNDR (dB)	84.5	78.88	100	89	78	101.5	71.7
ENOB (bit)	13.56	12.81	16.31	14.49	12.66	16.56	11.62
Power (mW)	0.4316	0.598	20	11.6	16.3	19.7	0.0252
Area (mm^2)	0.15	0.208	0.9	1.883	0.55	4	0.01
FoMw (fJ/Conv-step)	35.7	83.3	205.1	504.1	157.4	202.8	3.9
FoMs (dB)	173.3	171.1	172	175.34	165	175.5	177.8

[a] Post-simulation results.
[b] Measurement results.

FF process corner. By introducing ATA, the noise performance is decoupled from the comparator power consumption, thereby alleviating the dependence of high-precision ADCs on comparator power consumption and improving the overall performance across all process corners.

Table 1 provides the performance summary of the ADC and comparison with state-of-the-art SAR ADC. Thanks to the noise-reduction scheme, the SNDR is better than [5–7]. The FoMs is better than routine power-efficient ADC in [5,6,8]. Compared to the high-precision SAR ADC, the power is significantly lower than [6,8–10].

5. Conclusion

We proposed a power-efficient SAR ADC with a noise-reduction scheme based on kT/C cancellation and ATA. The kT/C noise cancellation technique reduces the size of the sampling capacitor to one-sixth of its initial value, which also reduces the kT/C noise. We also employ LSB repeating bits and an ATA algorithm to decouple the relationship between energy consumption and comparator noise. Simulation results indicated that kT/C noise cancellation and ATA enhance the SNDR by 4.8 dB and 3.5 dB, respectively. Implementing the efficient noise-reduction scheme results in FoMw of 35.7 fJ/conv-step and FoMs of 173.3 dB with 431.6 μW.

CRediT authorship contribution statement

Anji Huang: Investigation, Formal analysis, Writing – original draft. **Gefeng Zeng:** Investigation, Formal analysis. **Yi Shen:** Investigation, Writing – review & editing, Funding acquisition. **Angyang Li:** Investigation, Formal analysis. **Libo Qian:** Review & editing, Funding acquisition. **Qing Zou:** Review & editing. **Zheng Qiu:** Review & editing. **Min Wang:** Review & editing. **Shubin Liu:** Supervision, Reviewing. **Ruixue Ding:** Supervision, Reviewing, Funding acquisition. **Yinshui Xia:** Supervision, Reviewing. **Zhangming Zhu:** Project administration, Funding acquisition, Reviewing.

Declaration of competing interest

The authors declare that they have no known competing financial interests or personal relationships that could have appeared to influence the work reported in this paper.

Acknowledgments

This work was supported by the Pioneer and Leading Goose Key R&D Program of Zhejiang Province (2023C01016), the Natural Science Foundation of Zhejiang Province under Grant LDT23F04022F04 and Grant LDT23F0402, and the Leading Innovative and Entrepreneurial Team of Zhejiang Province (2023R01013).

Data availability

No data was used for the research described in the article.

References

[1] J. Liu, X. Tang, W. Zhao, L. Shen, N. Sun, A 13-bit 0.005 mm^2 40-MS/s SAR ADC with kT/C noise cancellation, IEEE J. Solid- State Circ. 55 (2020) 3260–3270, http://dx.doi.org/10.1109/JSSC.2020.3016656.
[2] T.-H. Wang, R. Wu, V. Gupta, X. Tang, S. Li, A 13.8-ENOB fully dynamic third-order noise-shaping SAR ADC in a single-amplifier EF-CIFF structure with hardware-reusing kT/C noise cancellation, IEEE J. Solid- State Circ. 56 (2021) 3668–3680, http://dx.doi.org/10.1109/JSSC.2021.3108620.
[3] W. Chen, Y. Zeng, Z. Li, J. Yang, Y. Li, A 41-nW SAR ADC with a FIA-based comparator and a bulk-driven latch for ECG applications, in: 2022 IEEE Asia Pacific Conference on Postgraduate Research in Microelectronics and Electronics (PrimeAsia), IEEE, Shenzhen, China, 2022, pp. 54–58, http://dx.doi.org/10.1109/PrimeAsia56064.2022.10103992.
[4] X. Hao, J. Chen, L. Meng, M. Zhao, Z. Tan, A 94.6 dB-SNDR 50 kHz-BW 1-1-1 MASH ADC using OTA-FIA based integrators, in: 2023 IEEE International Symposium on Circuits and Systems, ISCAS, IEEE, Monterey, CA, USA, 2023, pp. 1–4, http://dx.doi.org/10.1109/ISCAS46773.2023.10181887.
[5] C. Zhang, X. Xin, X. Tong, A 14-bit 1-MS/s SAR ADC with a segmented capacitor array and background mismatch calibration for IoT sensing applications, Microelectron. J. 141 (2023) 105991, http://dx.doi.org/10.1016/j.mejo.2023.105991.
[6] J. Shen, A. Shikata, L.D. Fernando, N. Guthrie, B. Chen, M. Maddox, N. Mascarenhas, R. Kapusta, M.C.W. Coln, A 16-bit 16-MS/s SAR ADC with on-chip calibration in 55-nm CMOS, IEEE J. Solid- State Circ. 53 (2018) 1149–1160, http://dx.doi.org/10.1109/JSSC.2017.2784761.
[7] L. Shen, N. Sun, Y. Shen, Z. Li, W. Shi, X. Tang, S. Li, W. Zhao, M. Zhang, Z. Zhu, A two-step ADC with a continuous-time SAR-based first stage, IEEE J. Solid- State Circ. 54 (2019) 3375–3385, http://dx.doi.org/10.1109/JSSC.2019.2933951.
[8] H. Luo, Z. Jiao, Y. Chen, J. Zhang, Q. Sun, X. Wang, H. Zhang, A 1.5 MSPS, 120 dB SFDR, ±10 V input range SAR ADC with sampling nonlinearity compensation and inherent 2-b coarse ADC for MSBs decision, Microelectron. J. 145 (2024) 106128, http://dx.doi.org/10.1016/j.mejo.2024.106128.
[9] Z. Du, B. Yao, W. Xu, X. Wang, H. Hu, L. Qiu, Capacitor mismatch calibration of a 16-bit SAR ADC using optimized segmentation and shuffling scheme, IEEE Trans. Circuits Syst. II 70 (2023) 2789–2793, http://dx.doi.org/10.1109/TCSII.2023.3252675.
[10] J. Steensgaard, R. Reay, R. Perry, D. Thomas, G. Tu, G. Reitsma, A 24b 2MS/s SAR ADC with 0.03 ppm INL and 106.3 dB DR in 180 nm CMOS, in: 2022 IEEE International Solid- State Circuits Conference, ISSCC, IEEE, San Francisco, CA, USA, 2022, pp. 168–170, http://dx.doi.org/10.1109/ISSCC42614.2022.9731652.